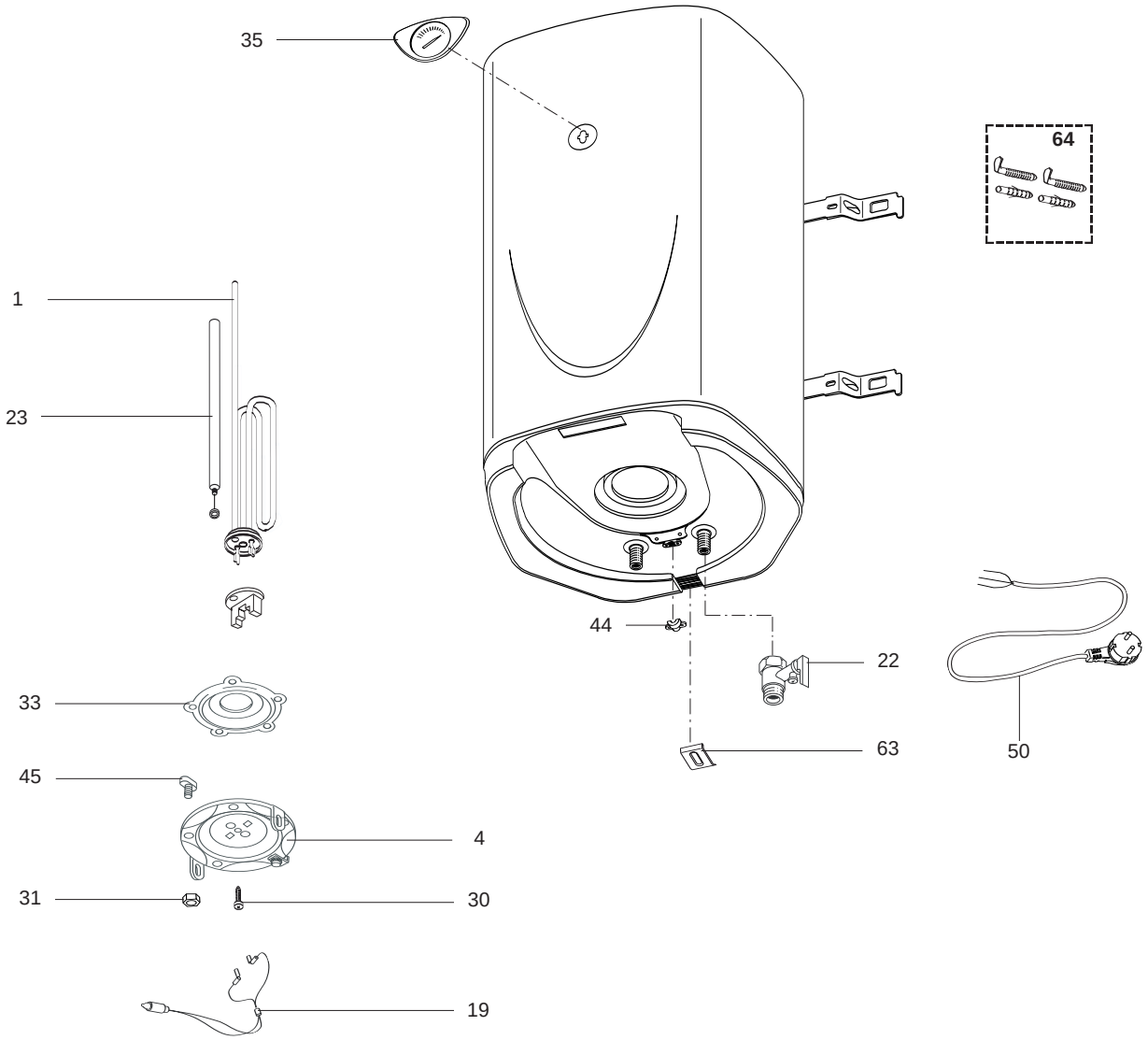
35
64
1
23
44
22
33
63
50
45
4
31
30
19

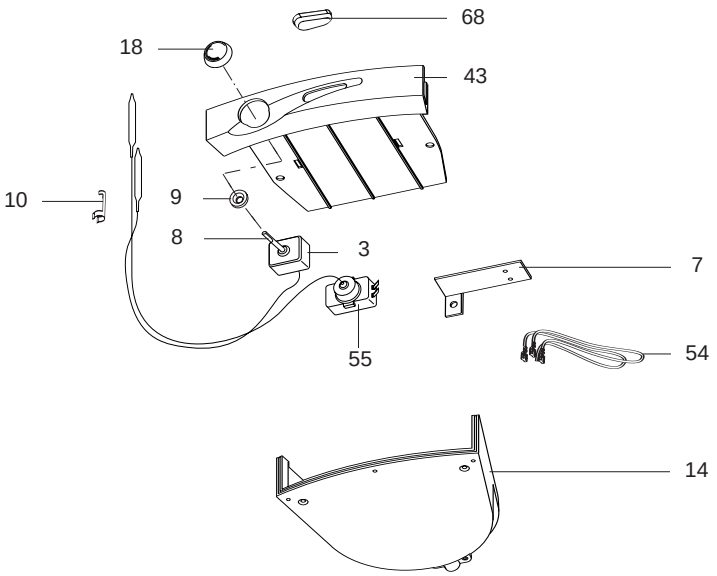
68
18
43
10
9
8
3
7
55
54
14

Key N	Description	Manf. Pt. N	Type	50 - 80 - 100	120 - 150		Manf. date from	Manf. date to
0001	ELEMENT (2000W/220-240V)	816703		■				
	ELEMENT (2200W/230V)	993191			■			
0003	BULB THERMOSTAT	993189		■	■			
0004	FLANGE D.75	570407		■	■			
0007	THERMOSTAT SUPPORT	993057		■	■			
0008	EXTENSION (THERMOSTAT PIN)	993193		■	■			
0009	THERMOSTAT GASKET	993194		■	■			
0010	SPRING (PROBE CLAMP)	993196		■	■			
0014	PLASTIC COVER	993208		■	■			
0018	REGULATION KNOB	993195		■	■			
0019	SIGNAL LAMP	993025		■	■			
0022	SAFETY VALVE WITH LEVER	571730		■	■			
0023	ANODE (D:21,5 L:230 M5)	993014		■				
	ANODE (D:20,7 L:553 M5)	993207			■			
0030	SCREW M6X12	993000		■	■			
0031	HEXAGONAL NUT	570127		■	■			
0033	FLANGE GASKET D. 75	570393		■	■			
0035	THERMOMETER	993227		■	■			
0043	COMPLETE CONTROL PANEL (FRONT)	993192		■	■			
0044	CABLE CLAMP	993154		■	■			
0045	SCREW M8X20	570316		■	■			
0050	CABLE (POWER SUPPLY)	993199		■	■			
0054	WIRING	993197		■	■			
0055	BULB THERMOSTAT (SAFETY)	993188		■	■			
0063	SPACER	993161		■				
0064	PLASTIC DOWELS	469989		■	■			
0068	SIGNAL LAMP CAP	994114		■	■			